# Industrial IP67 1-Port 802.3at PoE+ Injector

## Ideal for Powered Devices that Consume High Power

Planet IPOE-165 Industrial **IP67-rated** Single-port **802.3at PoE Plus** Injector provides a maximum of up to **30 watts** for PoE output port, transmitting both the Gigabit Ethernet data and 802.3at PoE power over the UTP cable. It is specifically designed for such outdoor powered devices (PDs) as PTZ network cameras, PTZ speed dome cameras, multi-channel (11a/b/g/n) wireless LAN access points and other network devices that need a higher power to work stably.

## Making Network Easier and More Reliable

The IPOE-165 can deliver 30-watt 54V DC power over Cat.5/5e/6 Ethernet cables which allow data and power to transmit simultaneously through the cable between the Injector (IPOE-165) and PoE PD or PoE Splitter (IPOE-162S/POE-162S). The maximum distance between the Injector and Splitter is 100 meters. As the IPOE-165 is also backward compatible with IEEE 802.3af PoE PD or PoE Splitter, the system administrator only has to use one single RJ45 Ethernet cable to carry both power and data to another device. It would make the network deployment easier and more reliable.

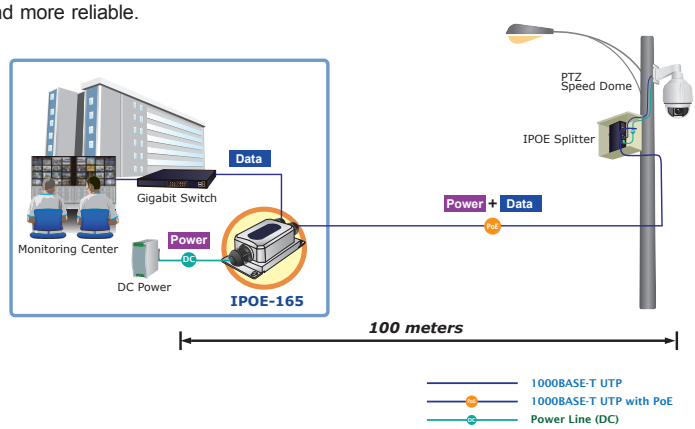


## Physical Port

- **Two 10/100/1000BASE-T** Gigabit RJ45 ports
  - 1-port Data + Power output
  - 1-port Data input
- **One 2-pin terminal block** for power input. (Power Range: 24 ~ 56V DC)

## Power over Ethernet

- 1-port data + power output
  - Complies with IEEE 802.3at Power over Ethernet plus PSE
  - Compatible with IEEE 802.3at/802.3af powered devices
  - Provides DC 44-56V power over RJ45 Ethernet cable to device with Ethernet port
  - Supports total PoE budget up to 30 watts for PoE output port
  - Auto detects powered device (PD)
  - Remote power feeding up to 100m

## Industrial Case and Installation

- IP67-rated and IK10-rated aluminum case
- LED indicators for power LED and PoE-in-use
- Wall-mount design
- Supports 6KV DC Ethernet ESD protection
- -40 to 75 degrees C operating temperature
- Plug and Play installation

### Weather-proof RJ45 Ethernet Connector and Shielded Plug

The IPOE-165 is ideal for installing an extended range of outdoor PoE devices such as outdoor PoE wireless access points, outdoor PoE IP cameras, outdoor PoE IP intercoms and many more. The IPOE-165 is equipped with 3 waterproof cable glands for direct-attach applications. Assembled with waterproof cable gland, it can make the general RJ45 connector weather-proof and provides tight and strong connection. Moreover, it comes with the industrial protection rating of IP67 capable of withstanding humidity, dirt, dust, shock, vibrations, heat and cold.

### Environmentally-hardened Design

With industrial-level IP67-rated aluminum case, the IPOE-165 provides a high level of immunity against electromagnetic interference, and is able to protect itself from dust and water ingress and to operate under the temperature range from -40 to 75 degrees C. All these features ensure the highest level of reliability for mission-critical applications in any difficult environment.

## Environmental Adaptations in Outdoor Area

### Convenient and Reliable Power System

To facilitate the 802.3at PoE+ usage with commonly used **24~56V DC** power input for transportation and industrial-level applications, the IPOE-165 adopts 24~56V DC to 54V **power boost** technology to solve power source issue but does not require special power supplies. Its wide-ranging voltages design is suitable for worldwide operability with high availability applications requiring dual or backup power inputs.

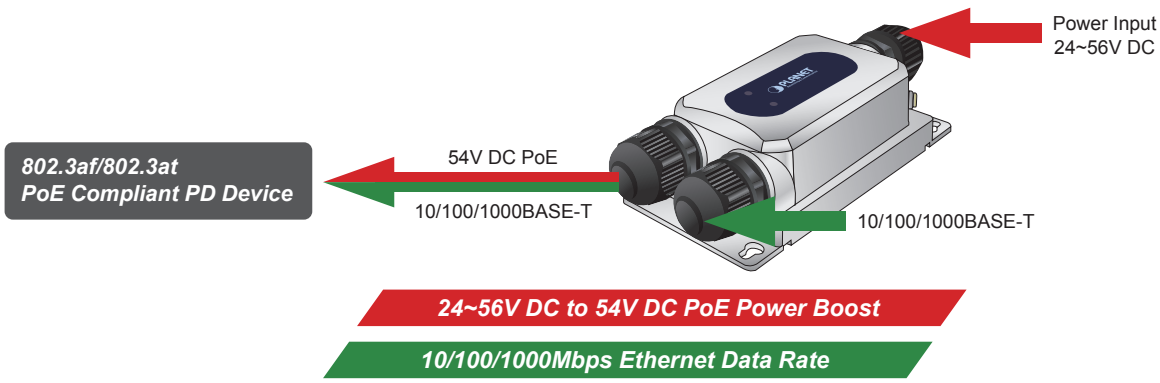

# Applications

*Connecting to IEEE 802.3at Compliant Powered Devices*

Having the capability of IEEE 802.3at Power over Ethernet standard, the IPOE-165 can directly connect and inject power via RJ45 Ethernet cable to any IEEE 802.3at end-nodes like PTZ network cameras, PTZ speed dome cameras, multi-channel wireless LAN access points and other network devices.

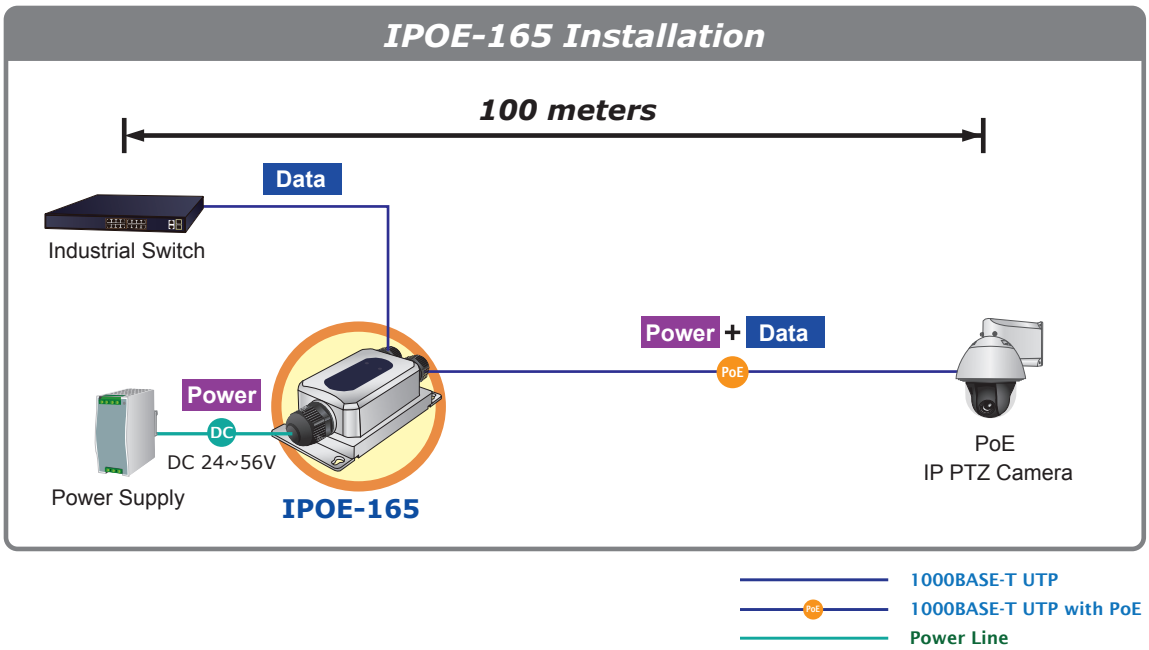


*IEEE 802.3at Injector and Splitter Installation*

For a place which is hard to find the power inlet, **the IPOE-165 and IPOE-162S can operate as a pair to provide the easiest way to power your Ethernet devices** which need high power input, such as PTZ network cameras, PTZ speed dome camera and multi-channel wireless LAN access points installed on the top of the building or in enterprise office or home.

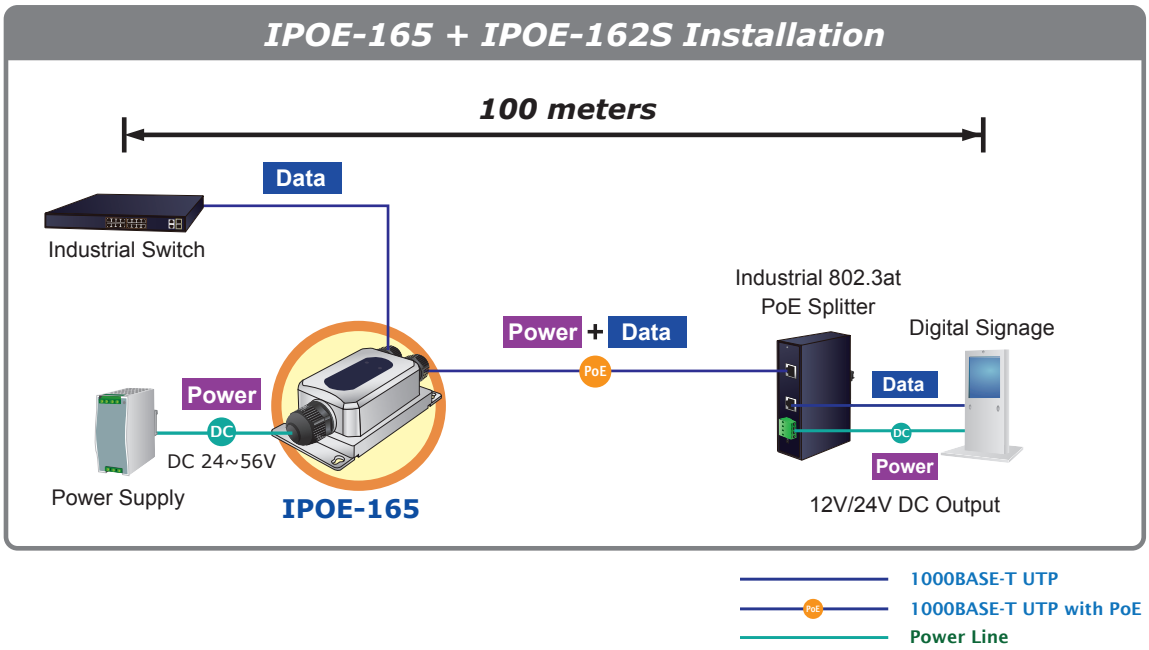

## Diagram

- IPOE-165 without waterproof cable glands

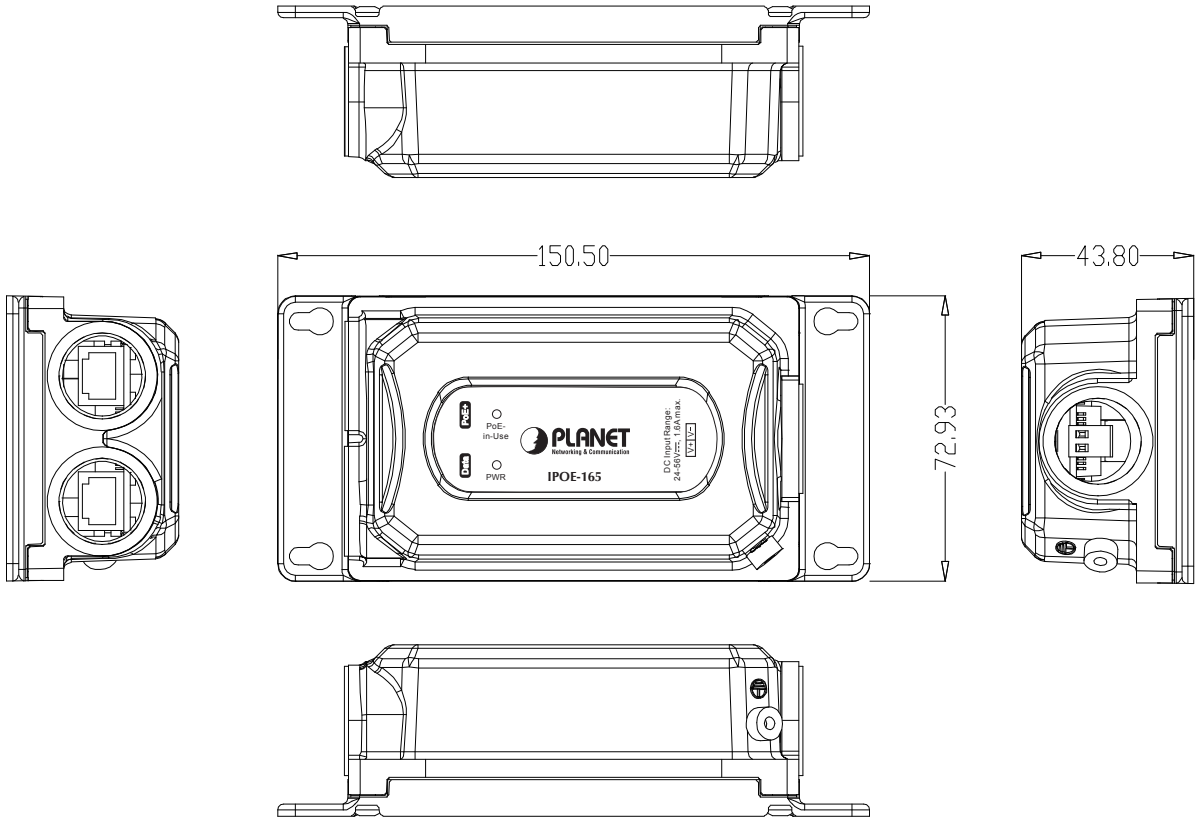


***Unit: mm***

- IPOE-165 with waterproof cable glands

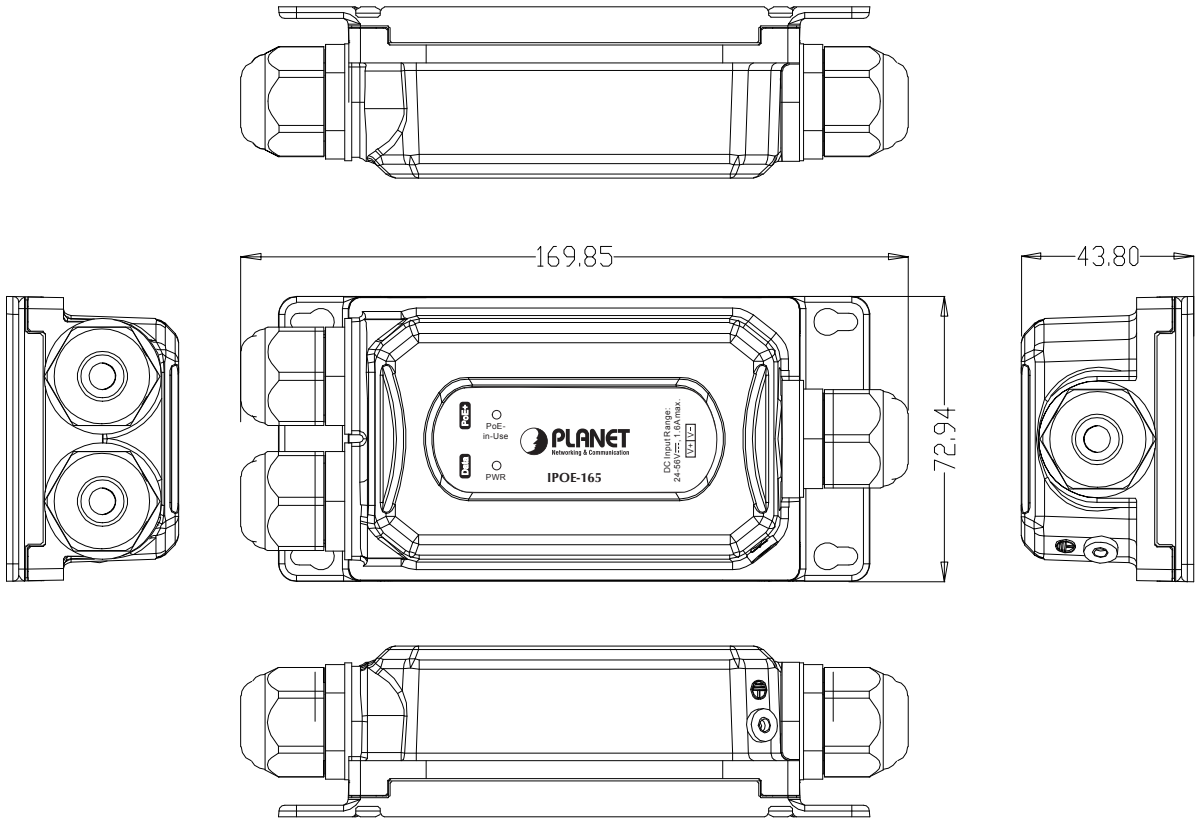


***Unit: mm***

# Product Specifications

| Product | | IPOE-165 | | |
|---|---|---|---|---|
| Hardware Specifications | | | | |
| Interface | Input Port | 1 x 10/100/1000BASE-T **"Data" in** RJ45 port | | |
| | Output Port | 1 x 10/100/1000BASE-T Ethernet with IEEE 802.3at PoE+<br>**"Data + DC" out** RJ45 port | | |
| | Input Power Terminal Block | 1 x 2-pin terminal block<br>- Pin 1/2 for Power (Pin 1: V+ / Pin 2: V-) | | |
| Data Rate | | 10/100/1000Mbps | | |
| LED Indicator | | PWR (**Green**)<br>PoE-in-use x 1 (**Green**) | | |
| Input Voltage | | 24~56V DC | | |
| PowConsumption | | Voltage | System on | Full Load (Max.) |
| | | DC 24V | 0.72W | 43.4W |
| | | DC 36V | 0.72W | 41.04W |
| | | DC 54V | 1.08W | 40.5W |
| ESD Protection | | Air 8KV DC<br>Contact 6KV DC | | |
| Surge Protection | | 6KV | | |
| Enclosure | | IP67-rated and IK10 aluminum metal case | | |
| Installation | | Wall-mount ear | | |
| Dimensions (W x D x H) | | 150 x 43.8 x 72.94 mm<br>169.85 x 43.8 x 72.94 mm, with cable gland | | |
| Weight | | 339g<br>373g (with three waterproof cable glands) | | |
| MTBF | | >100,000 hours | | |
| Network Cable | | 10BASE-T: UTP category 3, 5 cable (≤100m)<br>100BASE-TX: UTP category 5,5e cable (≤100m)<br>1000BASE-T: UTP category 5e,6 cable(≤100m) | | |
| Power over Ethernet | | | | |
| PoE Standard | | IEEE 802.3at Power over Ethernet Plus / End-span PSE<br>Backward compatible with IEEE 802.3af Power over Ethernet | | |
| PoE Power Output | | 54V DC, max. 30 watts | | |
| PoE Power Supply Type | | End-span | | |
| Power Pin Assignment | | 1/2 (+), 3/6 (-) | | |
| Standards Conformance | | | | |
| Regulatory Compliance | | FCC Part 15 Class A<br>CE | | |
| Stability Testing | | IEC 60068-2-32 (Free fall)<br>IEC 60068-2-27 (Shock)<br>IEC 60068-2-6 (Vibration) | | |
| Standards Conformances | | IEEE 802.3 10BASE-T Ethernet<br>IEEE 802.3u 100BASE-TX Fast Ethernet<br>IEEE 802.3ab 1000BASE-T Gigabit Ethernet<br>IEEE 802.3af Power over Ethernet<br>IEEE 802.3at Power over Ethernet Plus | | |
| Environment | | | | |
| Operating Temperature | | -40 ~ 75 degrees C | | |
| Storage Temperature | | -40 ~ 85 degrees C | | |
| Humidity | | 5 ~ 95% (non-condensing) | | |

# Ordering Information

| | |
|---|---|
| IPOE-165 | Industrial IP67 1-Port 802.3at PoE+ Injector (-40~75 degrees C) |

## Related Products

| | |
|---|---|
| IPOE-162 | Industrial IEEE 802.3at Gigabit Power over Ethernet Plus Injector (Mid-span, 30 watts) |
| IPOE-260 Series | Industrial 2-port 10/100/1000T 802.3at PoE+ Injector Hub |
| IPOE-162S | Industrial IEEE 802.3at Gigabit High Power over Ethernet Splitter |
| IPOE-171-95W | Industrial Single-Port 10/100/1000Mbps 802.3bt PoE++ Injector (95 Watts, -40~75 degrees C, 12~48V DC) |
| IPOE-171-60W | Industrial Single-Port 10/100/1000Mbps 802.3bt PoE++ Injector (60 Watts, -40~75 degrees C) |
| IPOE-270 /IPOE-270-12V | Industrial 2-port Multi-Gigabit 802.3bt PoE++ Injector Hub |
| PWR-75-48 | 48V, 75W Din-rail Power Supply (NDR-75-48, adjustable 48-56V DC Output) |
| PWR-60-24 | 60W 24V DC Single Output Industrial DIN-rail Power Supply (-20 ~ 70 degrees C) |
| PWR-75-24 | 75W 24V DC Single Output Industrial DIN-rail Power Supply (-20 ~ 70 degrees C) |

**PLANET Technology Corporation**

11F., No.96, Minquan Rd., Xindian Dist., New Taipei City 231, Taiwan (R.O.C.)

Tel: 886-2-2219-9518 Fax: 886-2-2219-9528

Email: sales@planet.com.tw www.planet.com.tw



PLANET reserves the right to change specifications without prior notice. All brand names and trademarks are property of their respective owners. Copyright © 2020 PLANET Technology Corp. All rights reserved.